Parts:

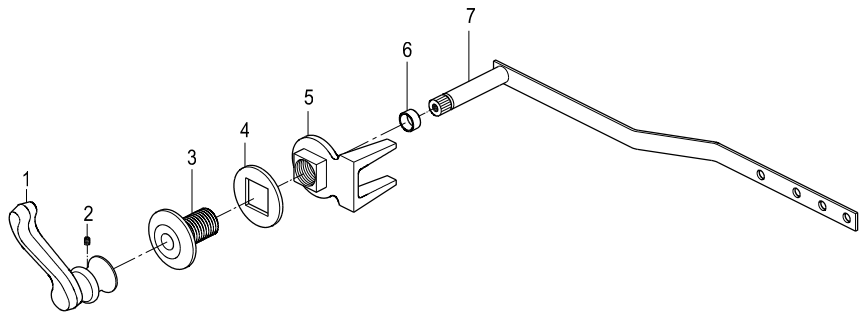

Replacement Parts:

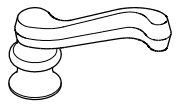

Handle: KTHFL1

ONE-YEAR LIMITED WARRANTY

KINGSTON BRASS Sinks, tubs and toilets are warranted to be free of defects in material and workmanship for one year from date of installation. Kingston Brass will, at its election, repair, replace or make appropriate adjustment where Kingston Brass inspection discloses any such defects occurring in normal usage within one(1) year after purchase to its original owner. Proof of purchase (original sales receipt) must be provided to Kingston Brass with all warranty claims. Kingston Brass is not responsible for removal or installation costs. Use of in-tank toilet cleaners will void the warranty.

To obtain warranty service, contact the Dealer, Plumbing Contractor, Home Center or E-tailer, or contact Kingston Brass by calling 1-877-252-7277 or write to Attn: Warranty Department, 12775 Reservoir Street, Chino, CA 91710.

Some states/provinces do not allow limitations on how long an implied warranty lasts, or the exclusion or limitation of special, incidental or consequential damages, so these limitations and exclusions may not apply to you. This warranty gives you specific legal rights. You may also have other rights which vary from state/province to state/province.

* Never use cleaners containing abrasive cleansers, ammonia, bleach, acids, waxes, alcohol, solvents or other products not recommended for chrome. This will void the warranty.

KINGSTON BRASS

THE TRADITION OF FINE BRASS

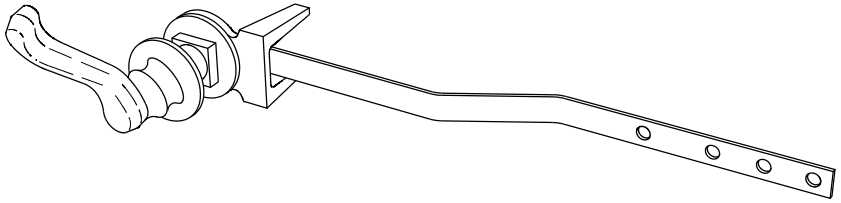

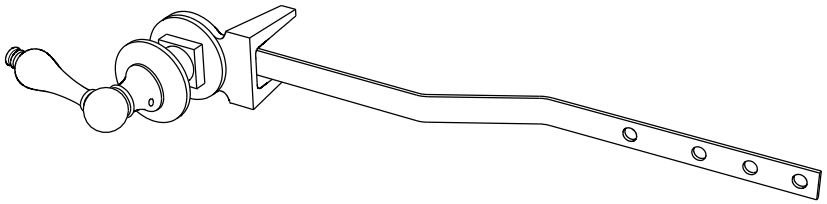

www.kingstonbrass.com
TOLL-FREE CUSTOMER SERVICE: 1-877-2-KBRASS
TECHNICAL SUPPORT E-mail: service@kingstonbrass.com
12775 Reservoir Street, Chino, CA91710

KINGSTON BRASS
THE TRADITION OF FINE BRASS

INSTALLATION INSTRUCTIONS
For Use With KB's Mount Tank Lever

Need Tools:

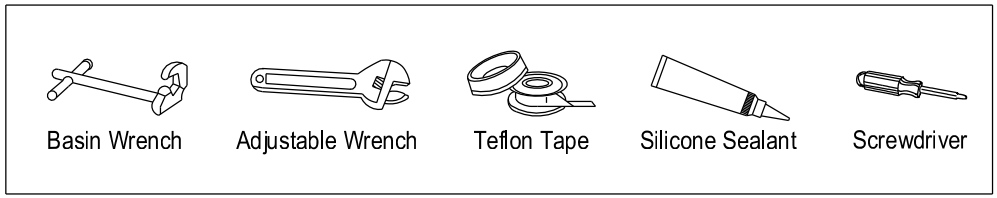

Disassemble Tank Lever :
Removing brass cotter pin from handle assembly end and slide pieces off.

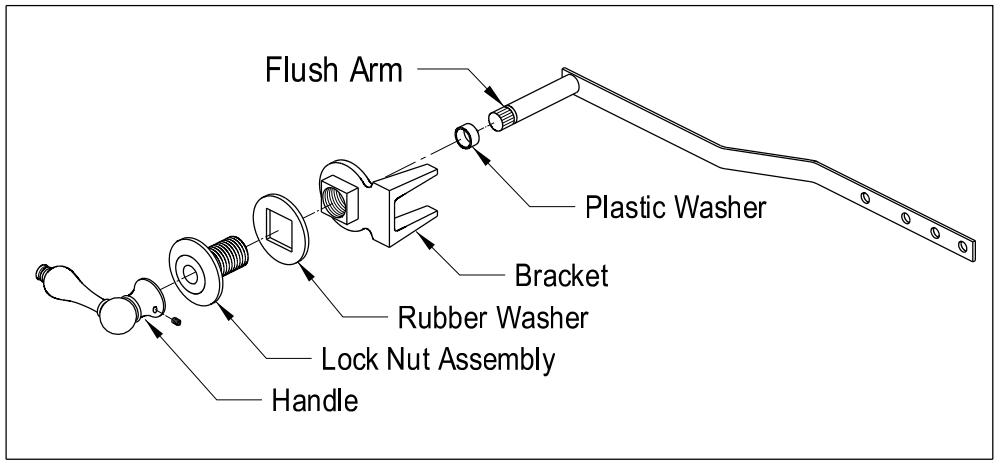

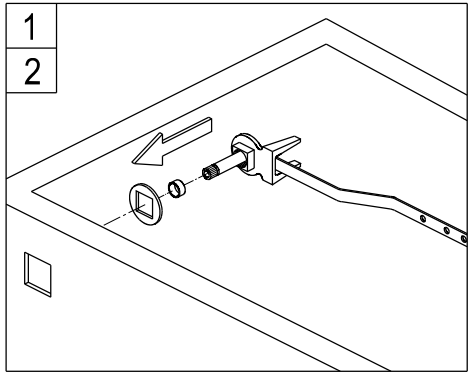

1. Insert plastic washer and flush arm through bracket.
2. Place rubber washer onto bracket.

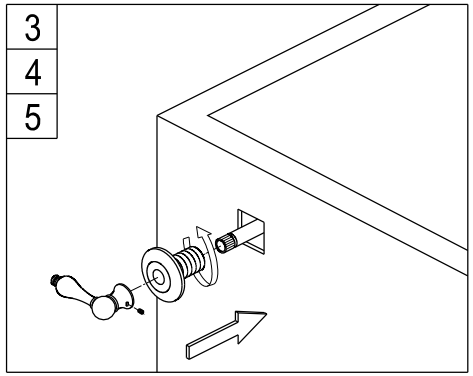

3. Slide lock nut assembly over end of flush arm from front and tighten by hand or wrench.
4. Position handle to the right or left depending on preference and secure by tightening set screw on the side of the handle or in certain applications it may have a screw in the center of the handle.
5. After securing handle, placed decorative handle cap (certain models only) onto handle.

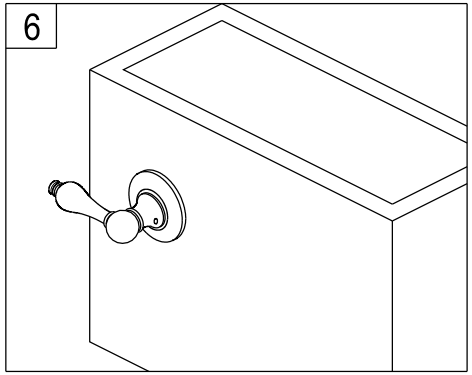

6. Flush arm may be bent to fit individual applications.

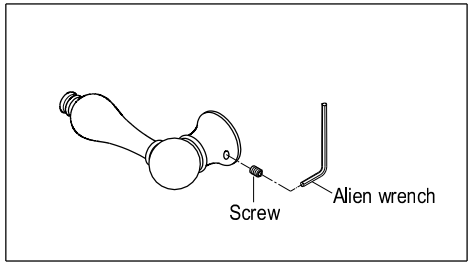

Lever Handle :
1. Be sure the broaches screws are tightened before installing the lever handles.
2. Put the lever handles on the broaches and tighten using the alien wrench provided.

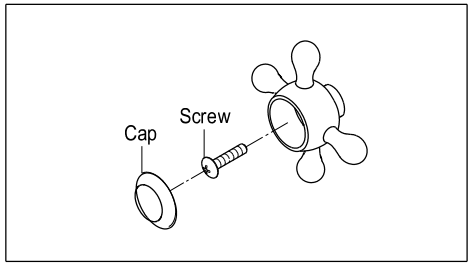

Cross Handle :
1. Unscrew the screws from the top of the broaches.
2. Remove the insert cap from the cross handles.
3. Put the cross handle on the broaches and then tighten the screws. Insert the caps on the cross handles.

©2015-04-LK Kingston Brass