BA622C,SNCP
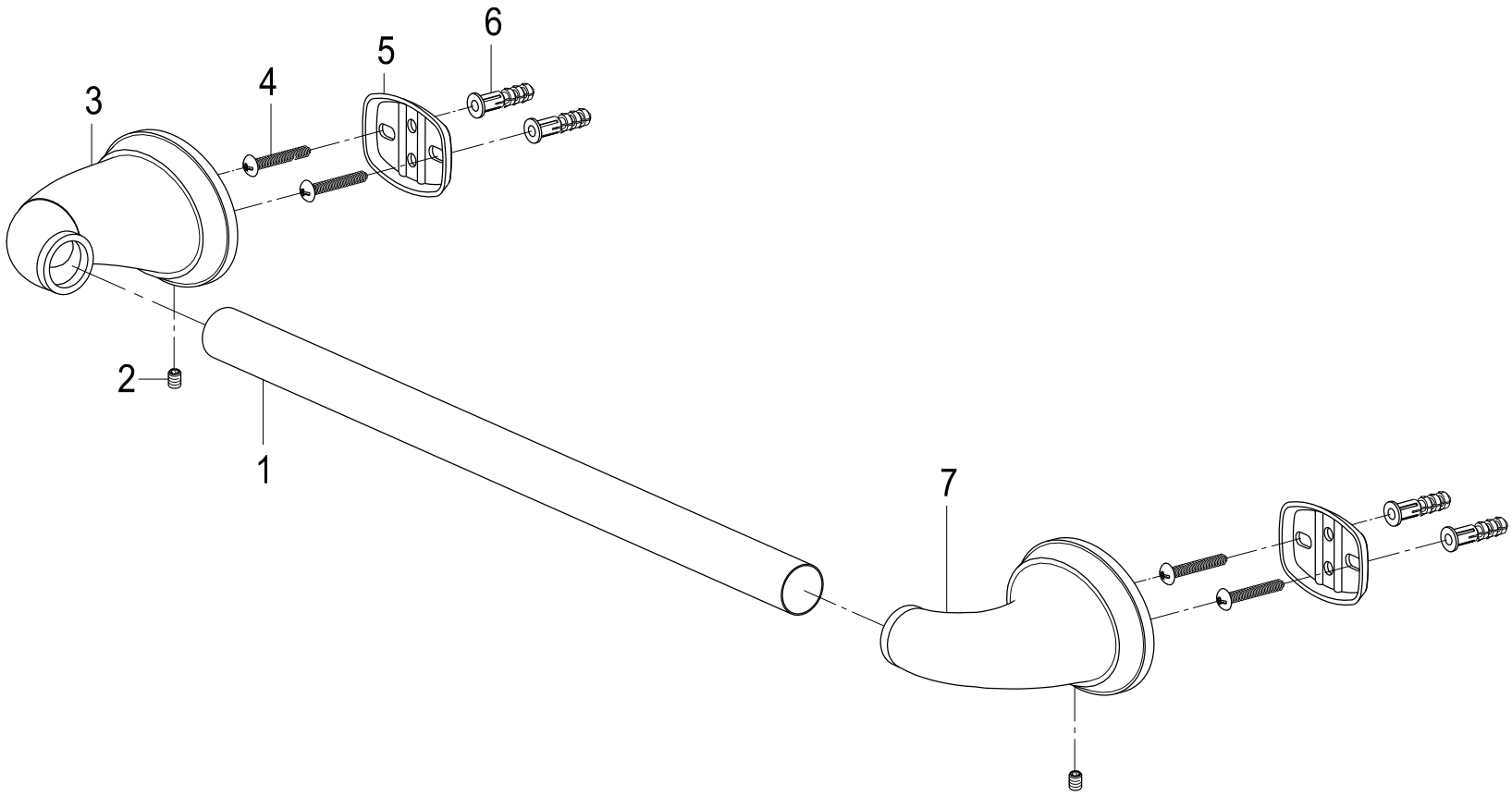
18" Towel Bar