DR414301,2,5,8
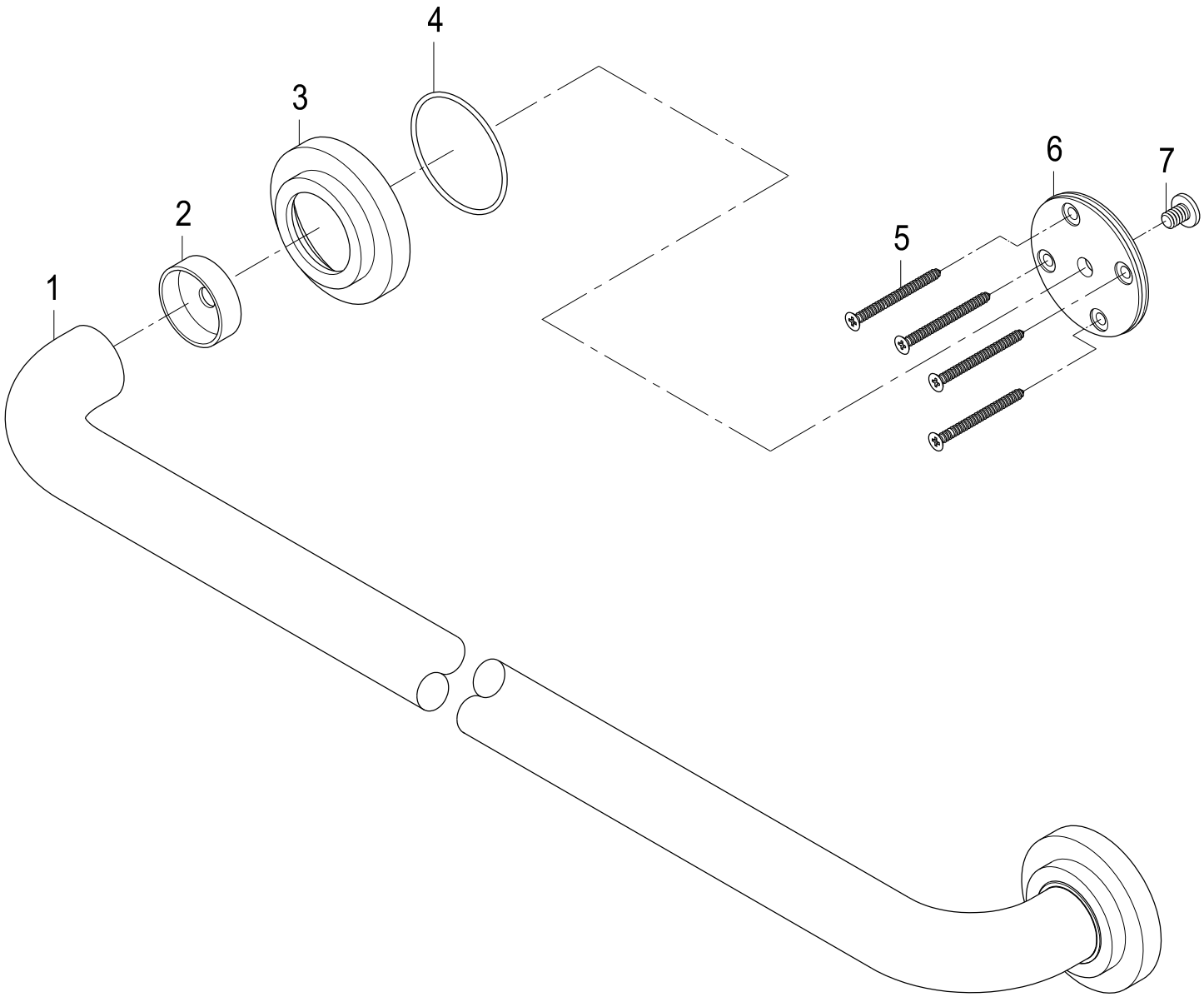
Grab Bar 1-1/4" O.D. x 30", 17 Gauge