DR910241,2,3,5,6,8
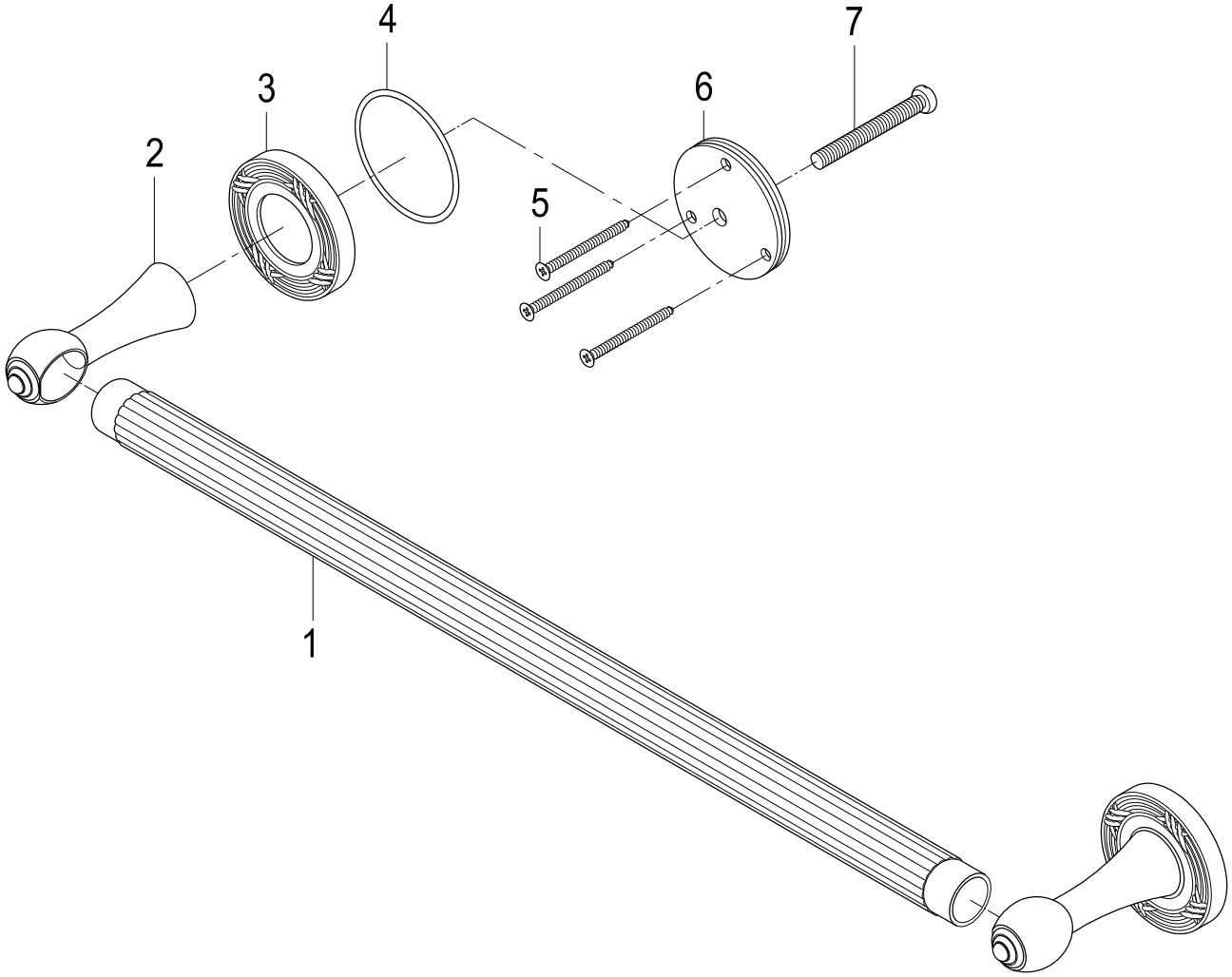
Grab Bar 1" O.D. x 24"