KS1491,2,3,5,6,8AX
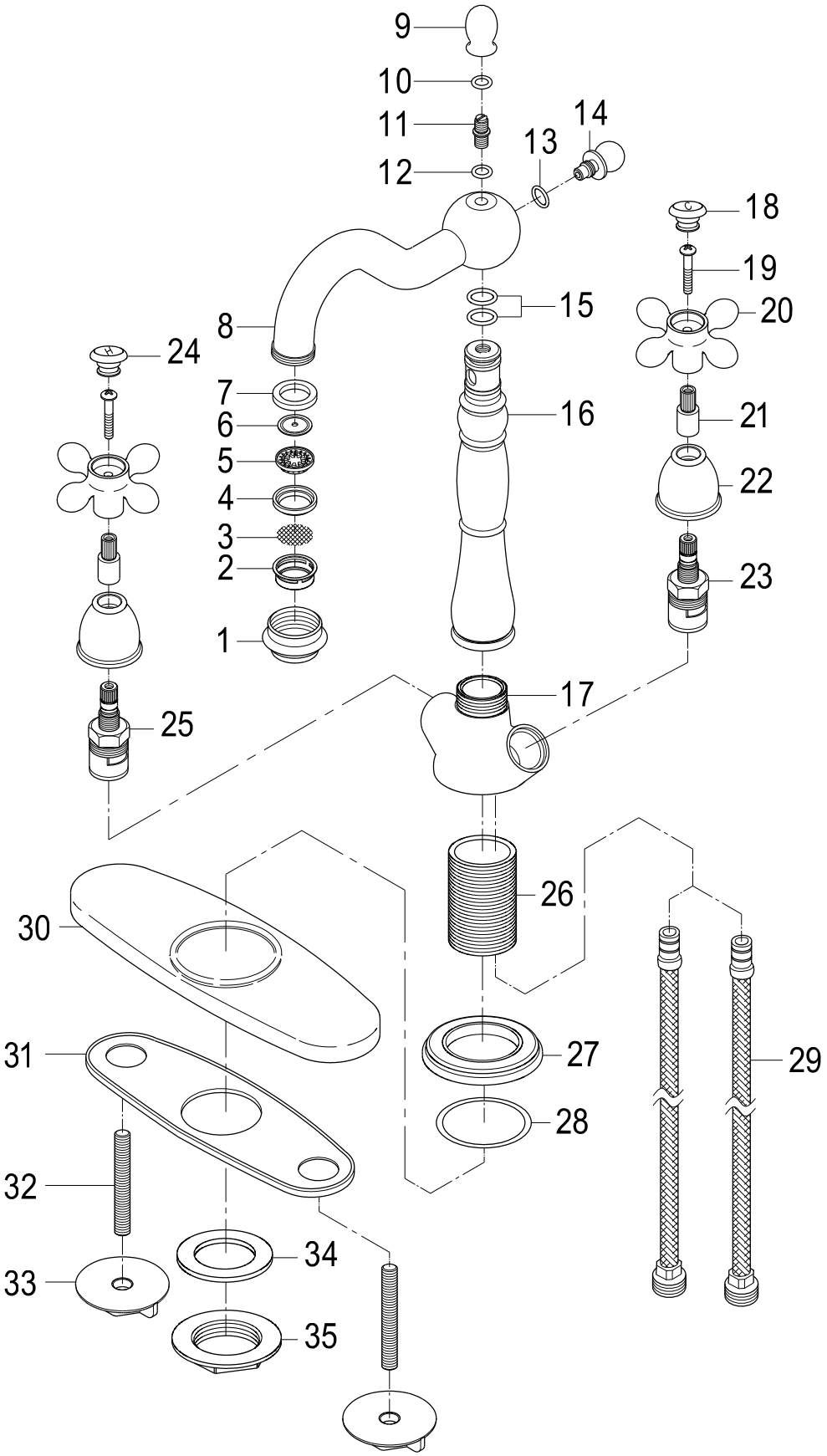
Twin Handles Vessel Sink Faucet