KS3601,2,5,8AL
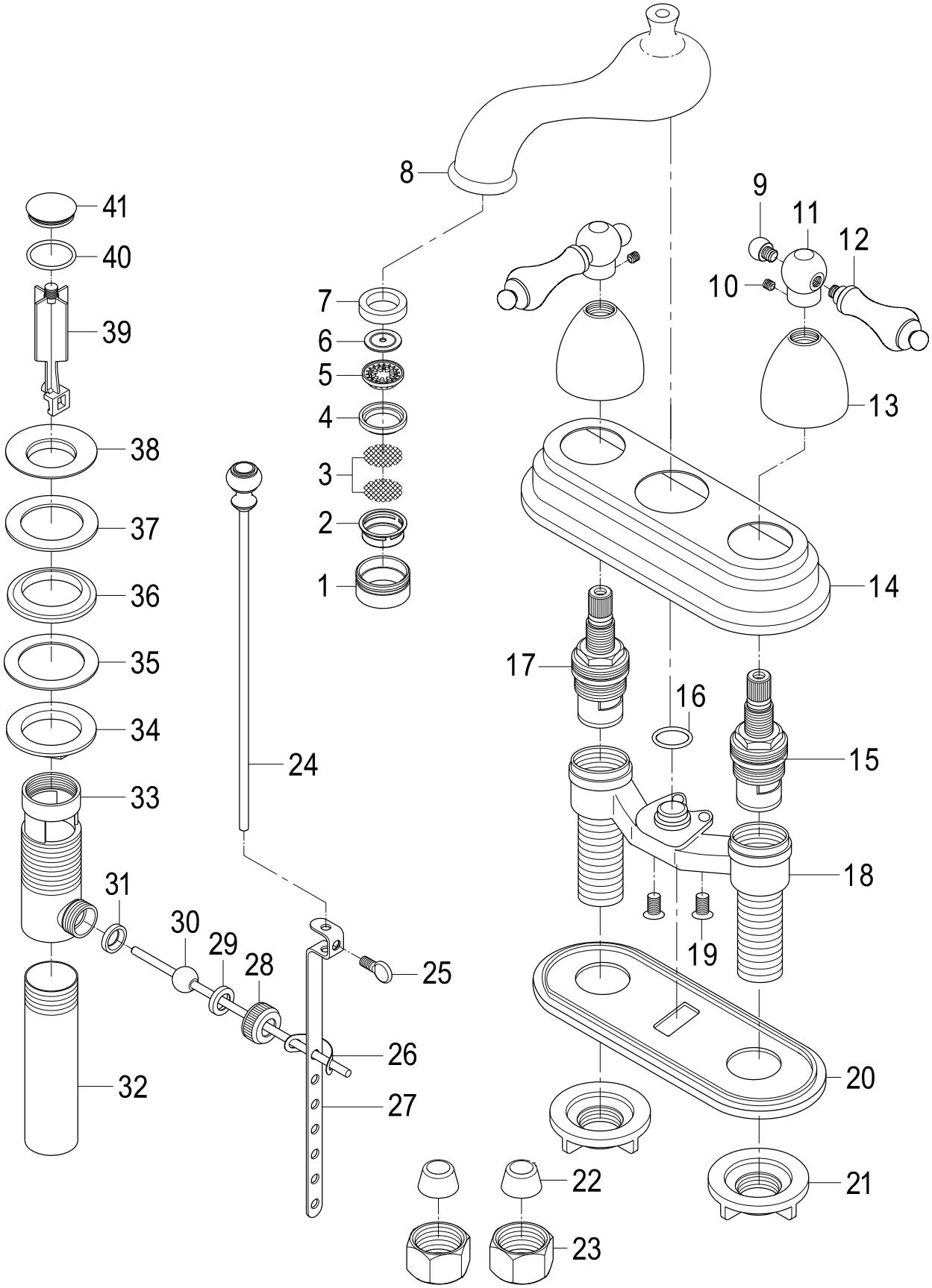
Twin Handles Lavatory Faucet With Brass Pop-Up