KS4461,2,4,5,8AL
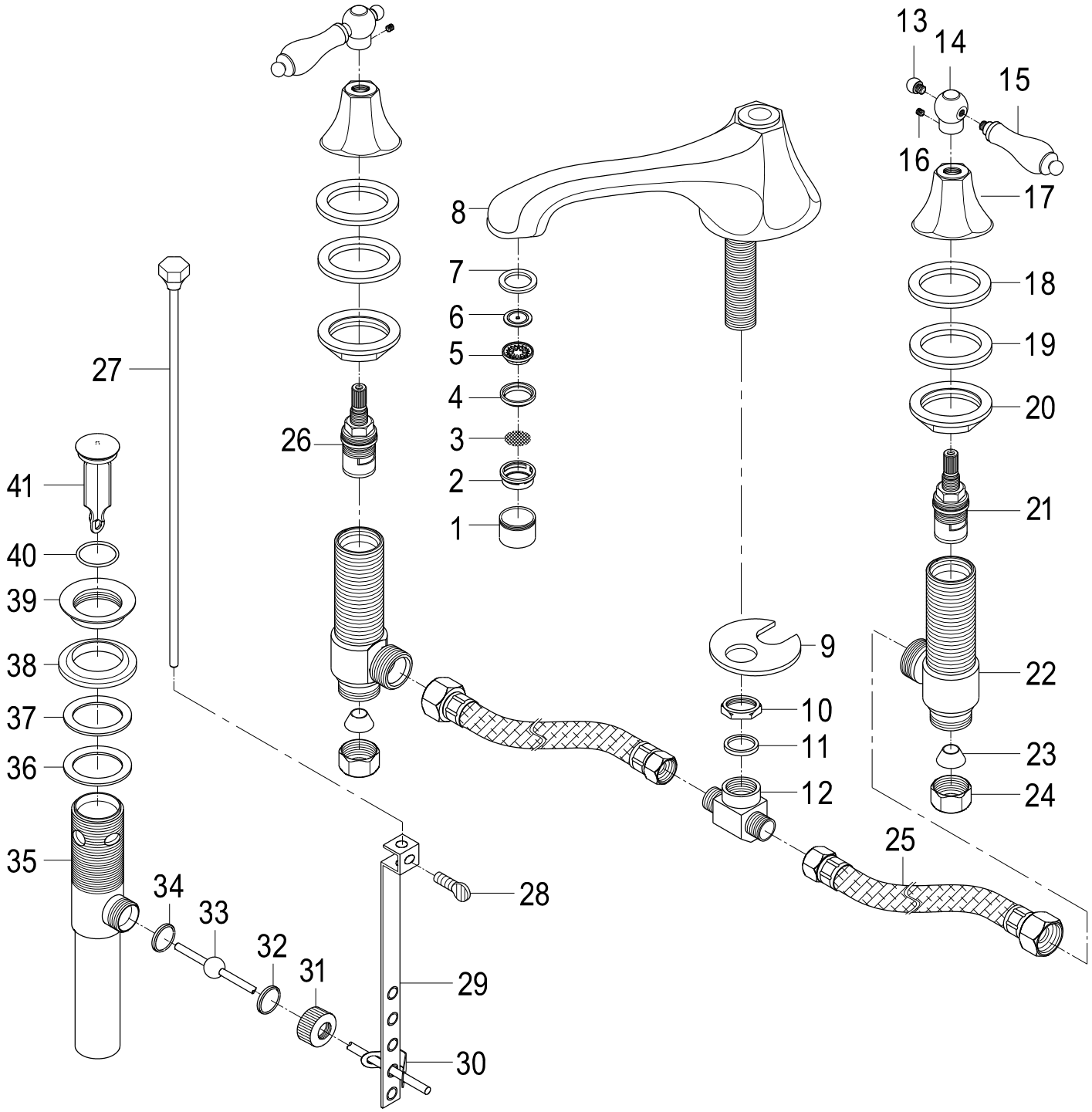
Widespread Lavatory Faucet With Brass Pop-Up