KS4491,2,5,8HL
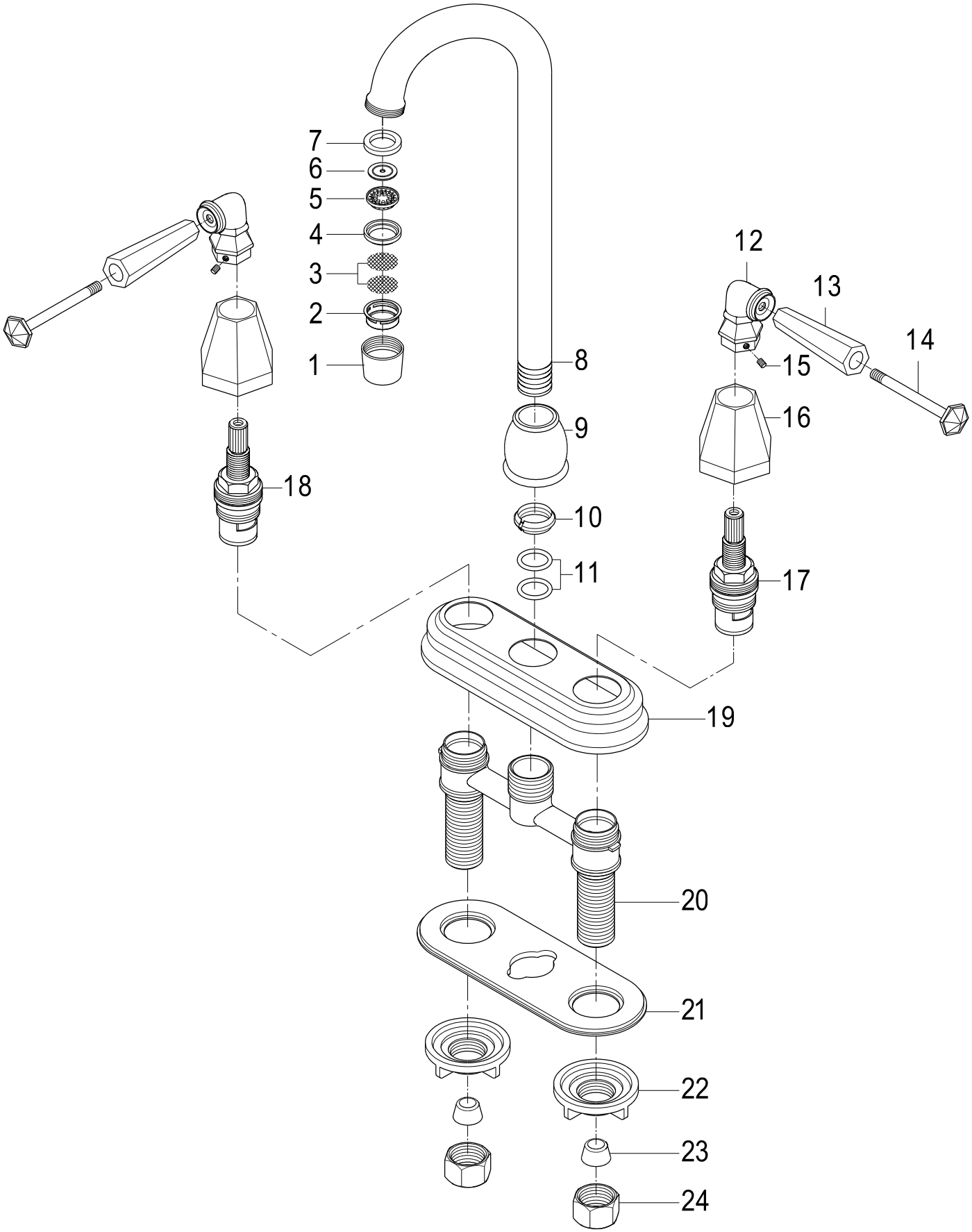
Twin Handles 4" Centerset Bar Faucet