ABT1040-1,2,5,8
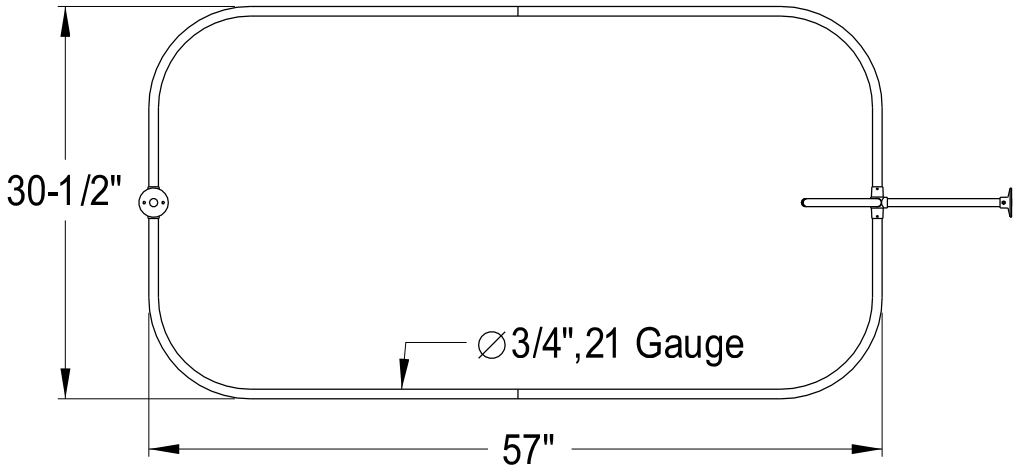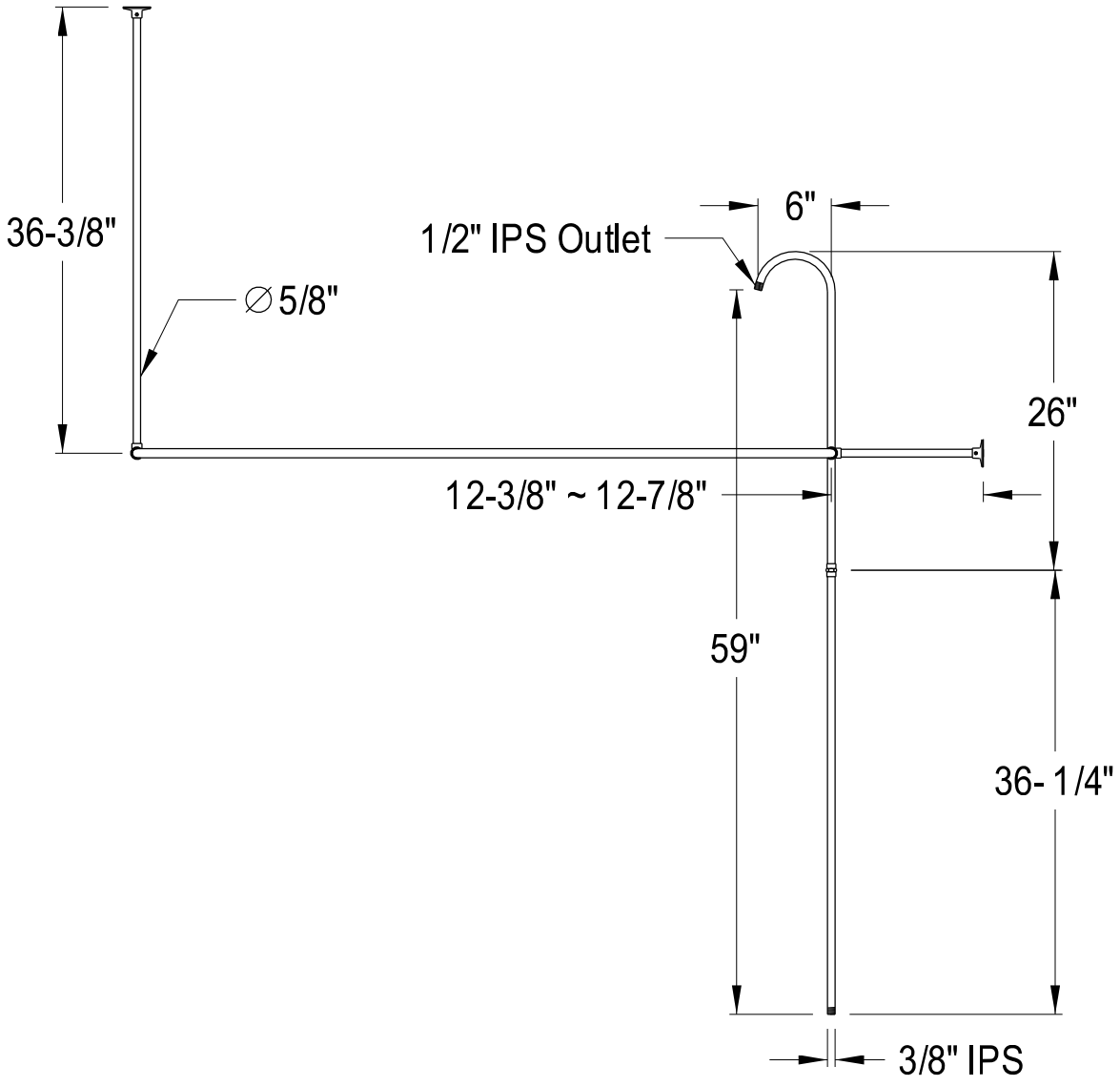
Oval Shower Riser with Enclosure