BA605C,PB,ORB,VN
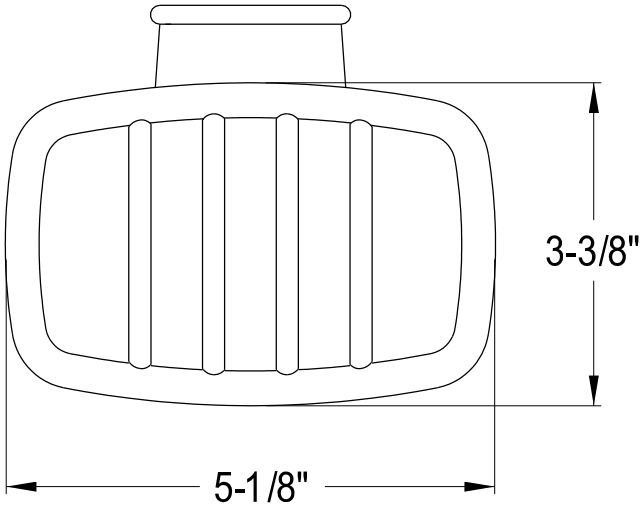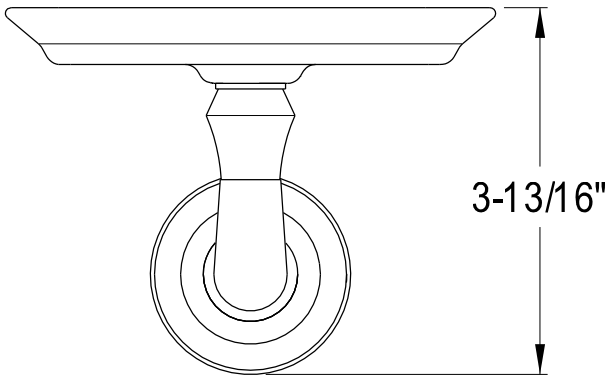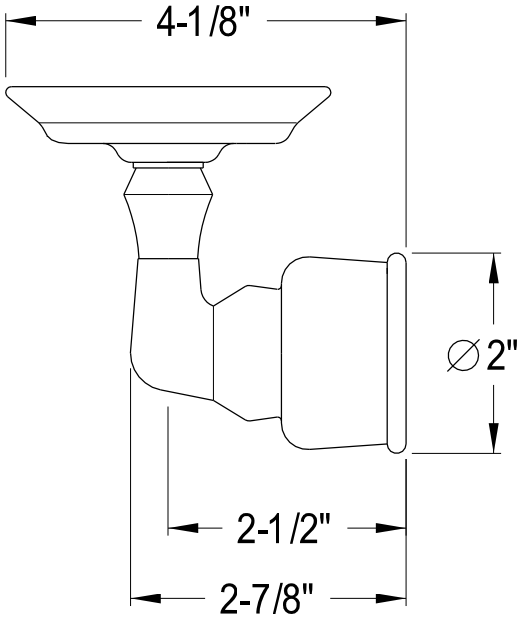
Soap Dish Holder