CC1302T1,CC1301T2,5,8
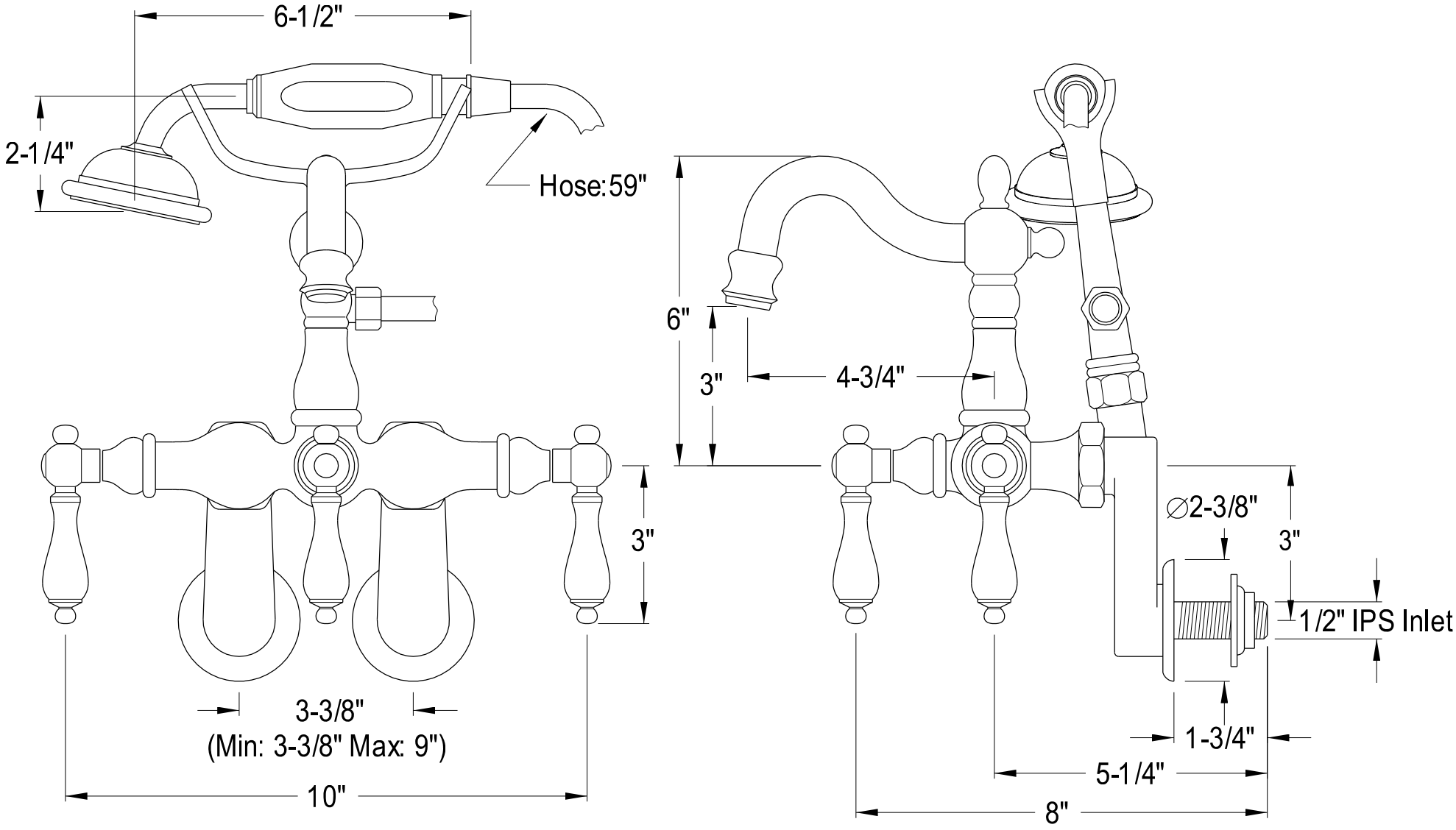
Wall Mount Clawfoot Tub Filler Faucet With Hand Shower