GKTS25228

Stainless Steel Self-Rimming Single Bowl Kitchen Sink, 4 Holes, (L)25" X (W)21-15/16" X (D)8-3/16"
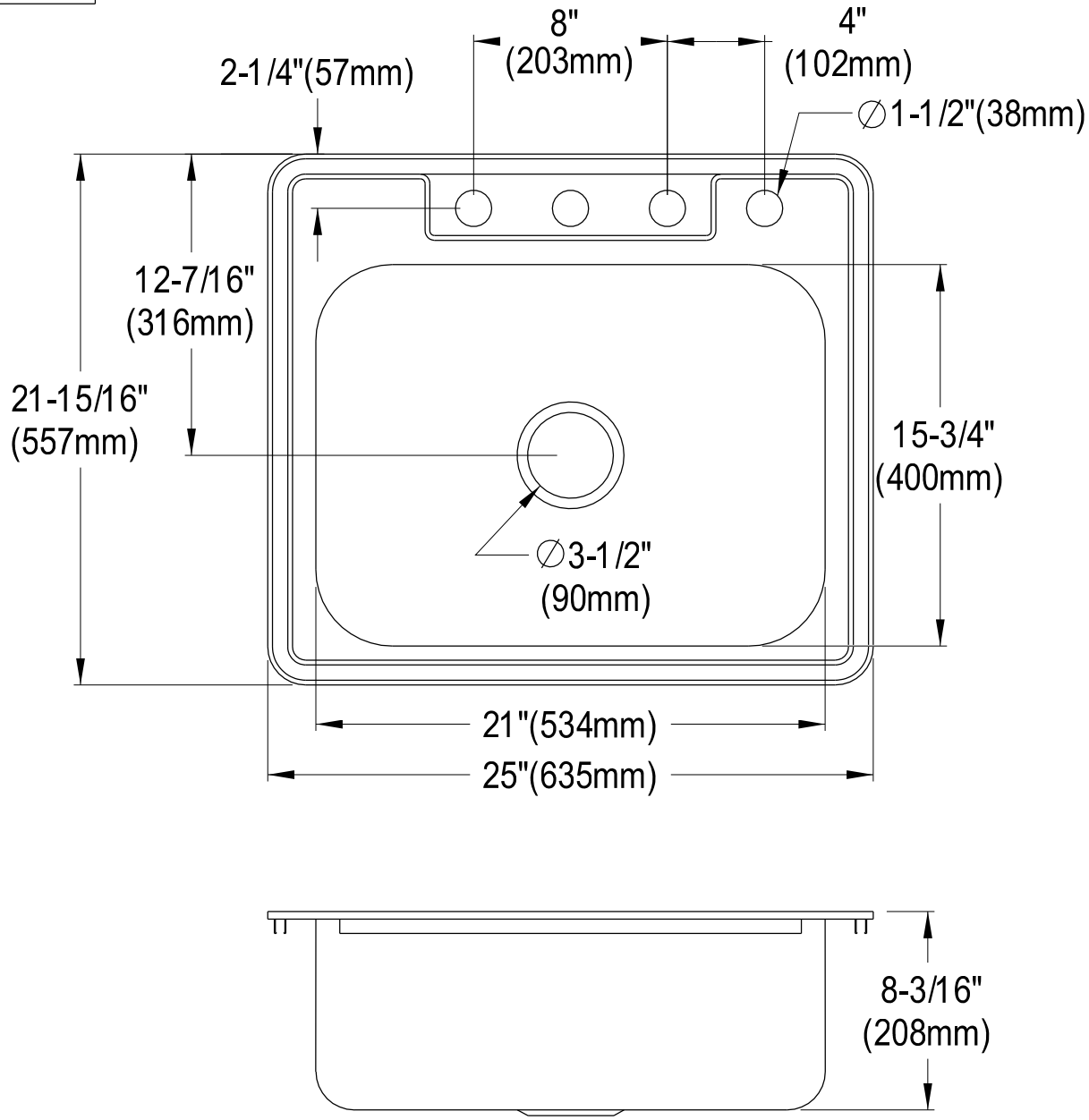
Depth	SS Type	Thickness
8-3/16"	18-10 304 Grade	0.68mm