KB1401,2,5,8PL
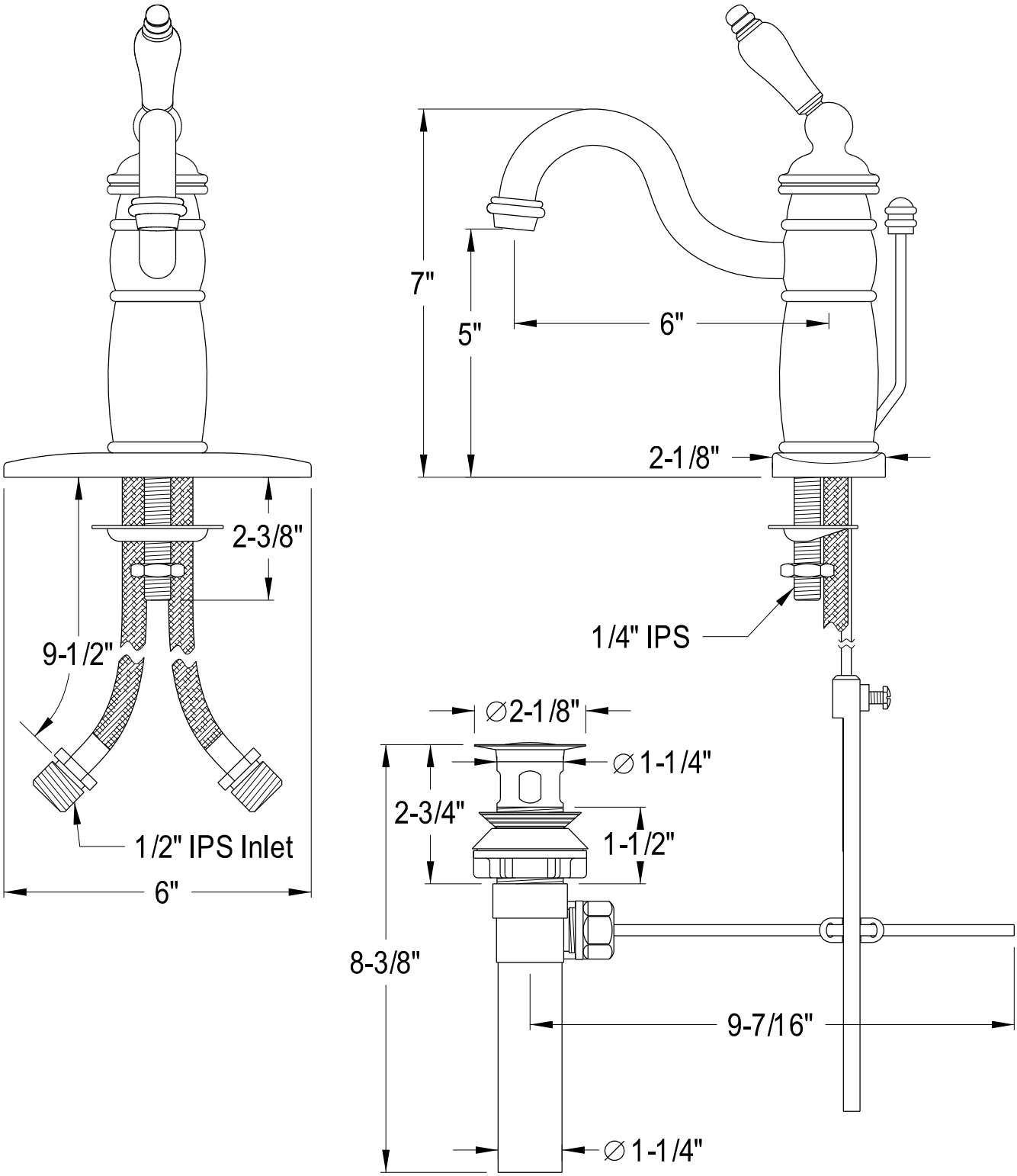
Single Handle 4" Centerset Lavatory Faucet With Retail Pop-Up