KB661,2,5,8AL
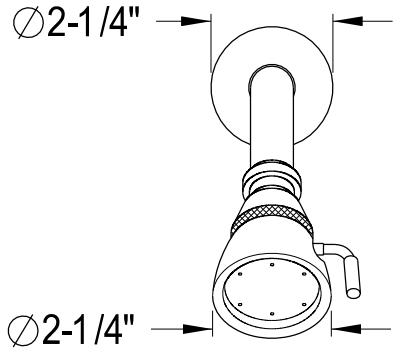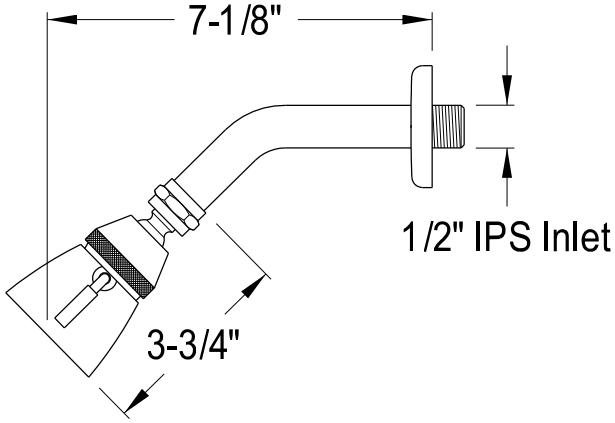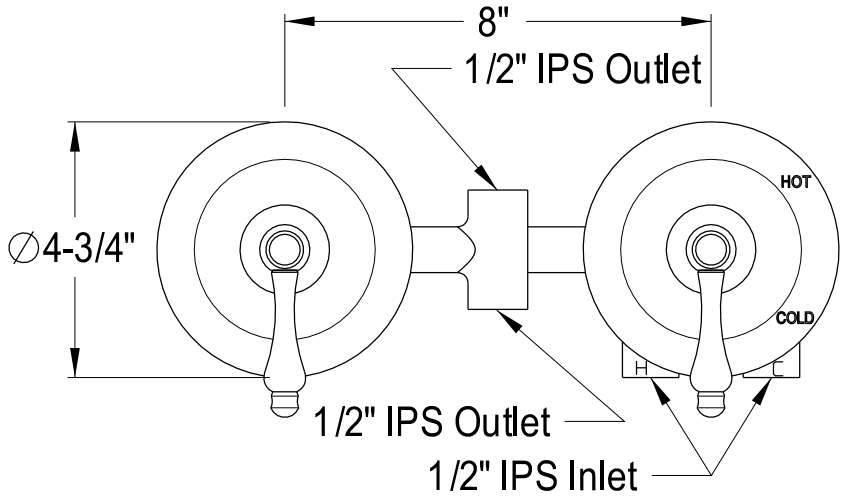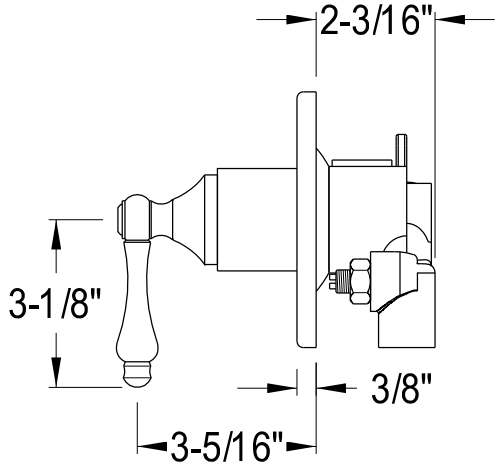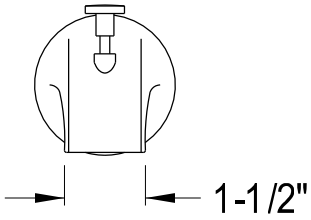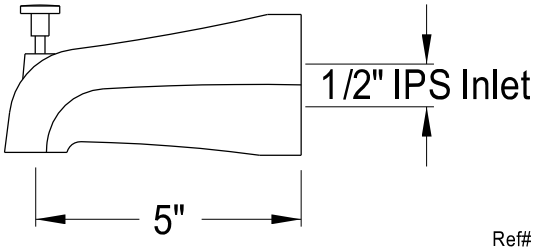
Twin Handles Pressure Balanced Tub & Shower Faucet With Volume Control