KB8911,2,5,8NFL
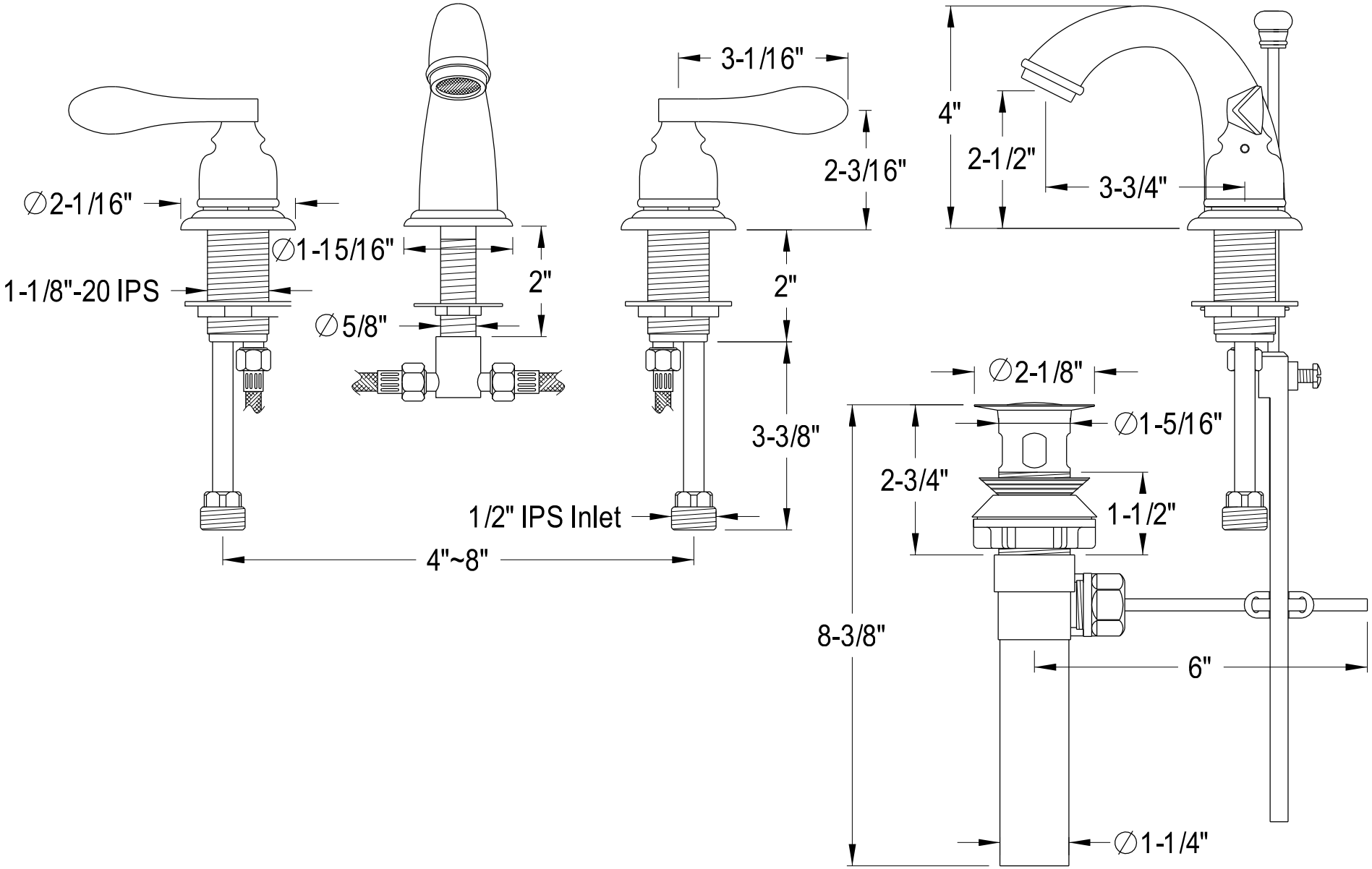
Mini Widespread Lavatory Faucet With Retail Pop-Up