KS1171,2,5,8TX
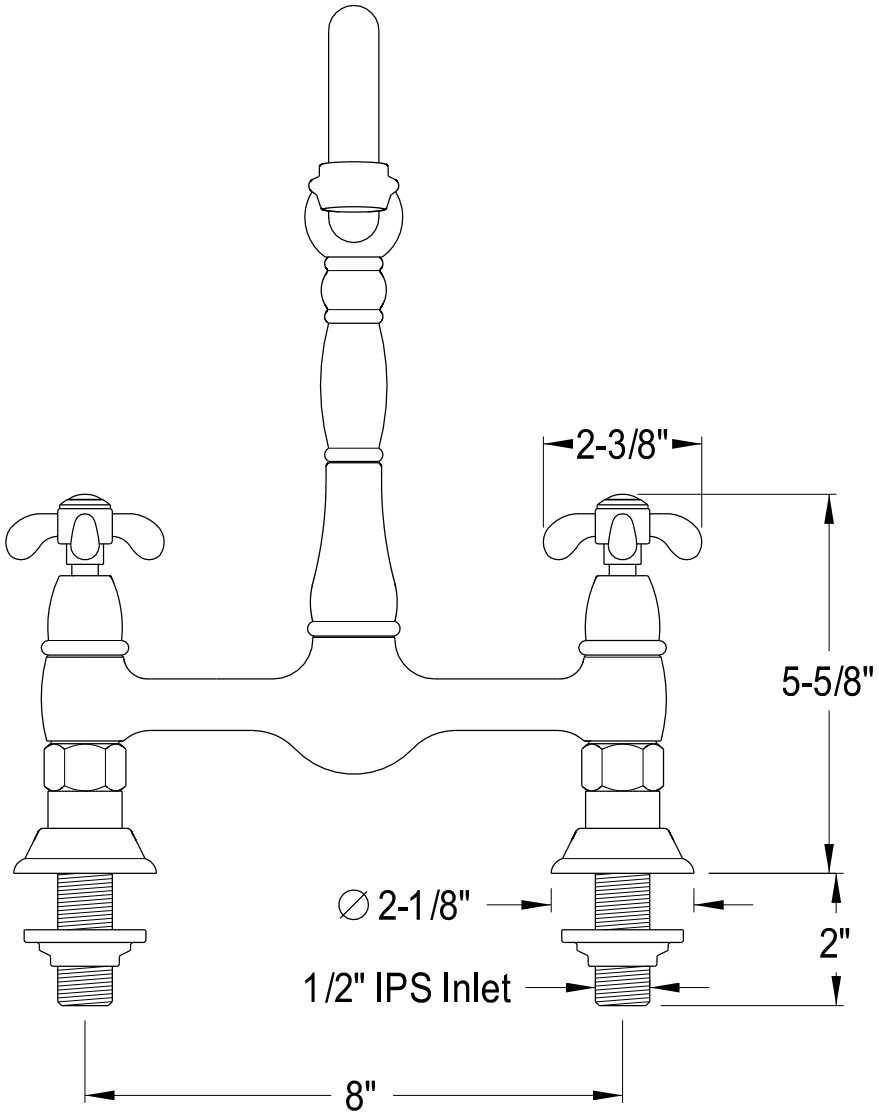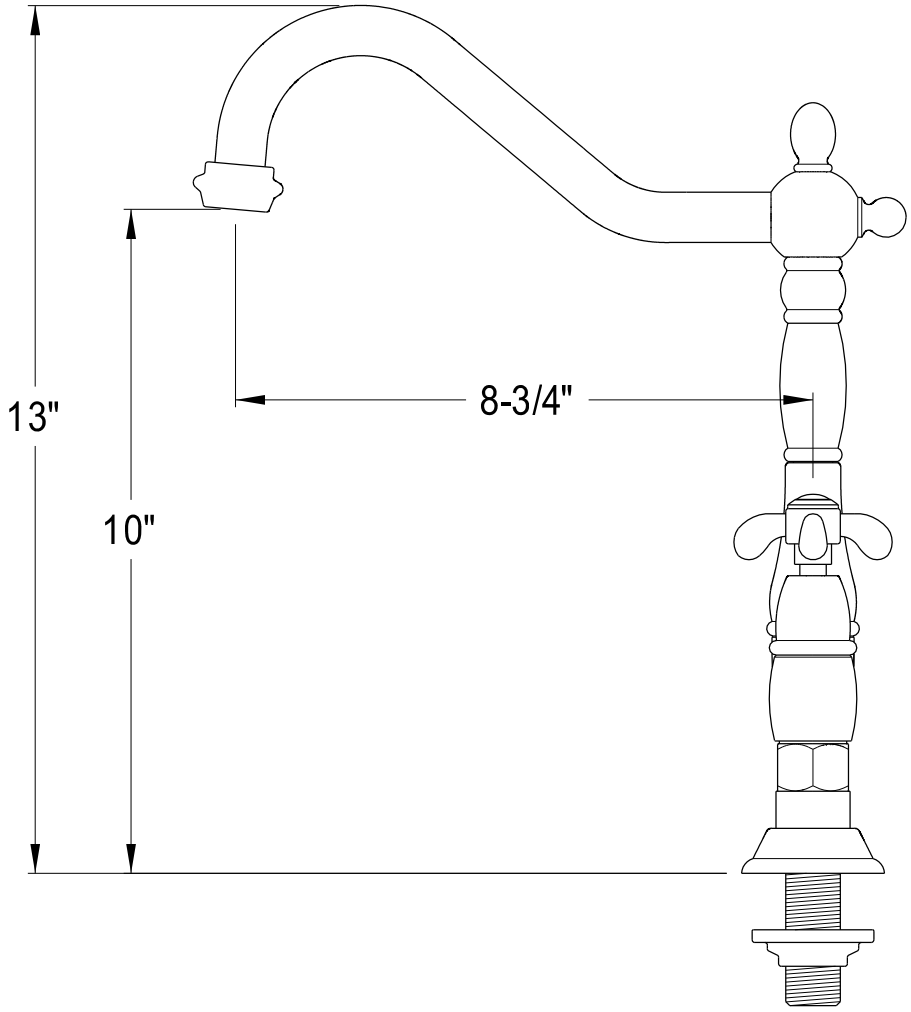
Twin Handles 8" Deck Mount Kitchen Faucet