KS2961,2,5,8DL

Widespread Lavatory Faucet With Brass Pop-Up

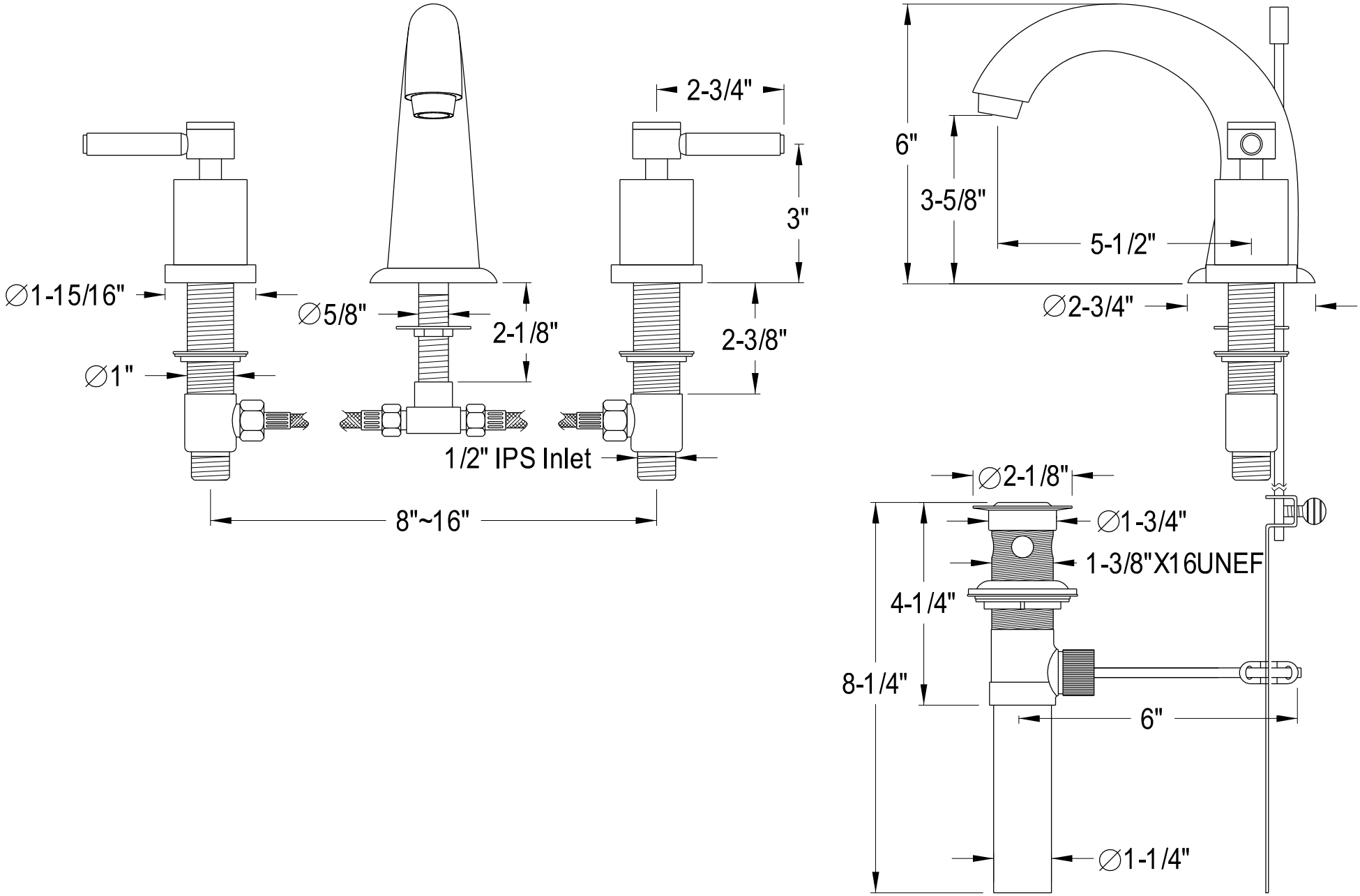

Ref# KS2961,2,5,8DL | 2015-01-B