# KS2981,2,5,8PX
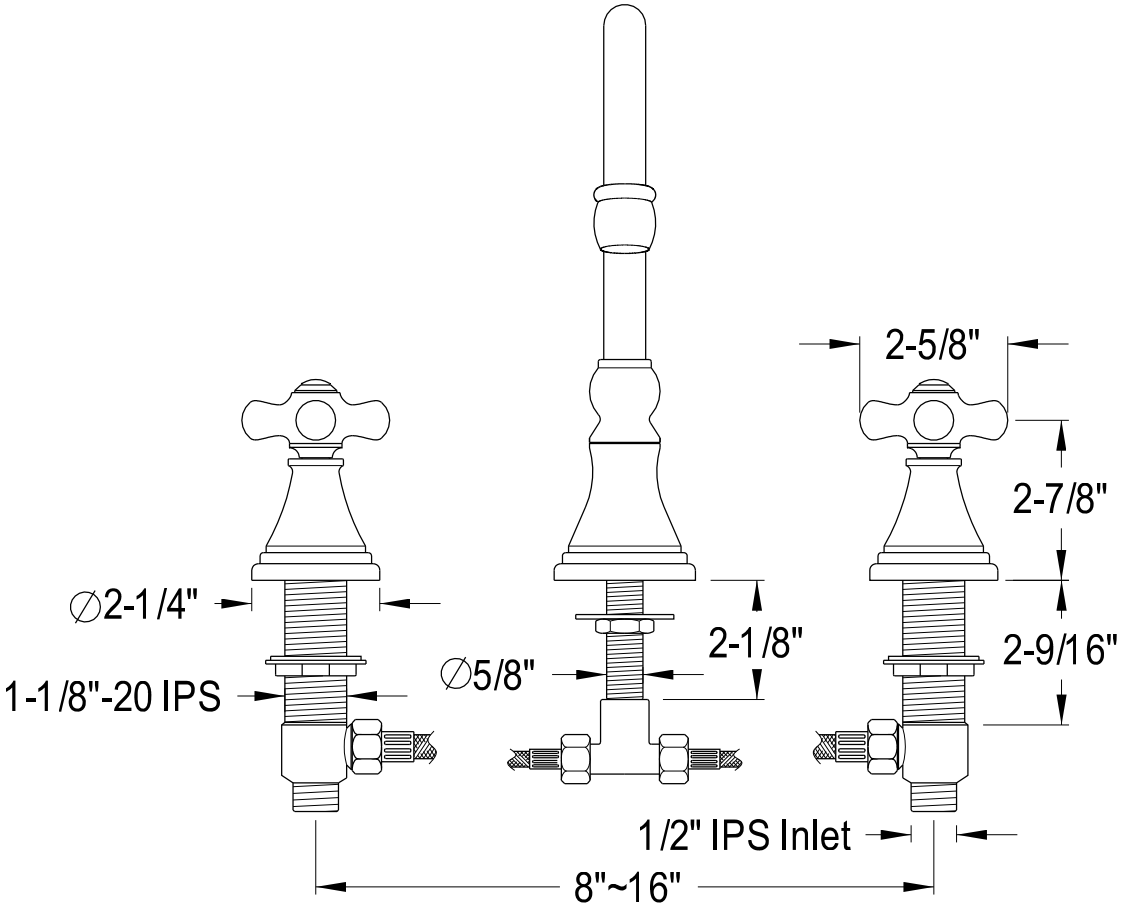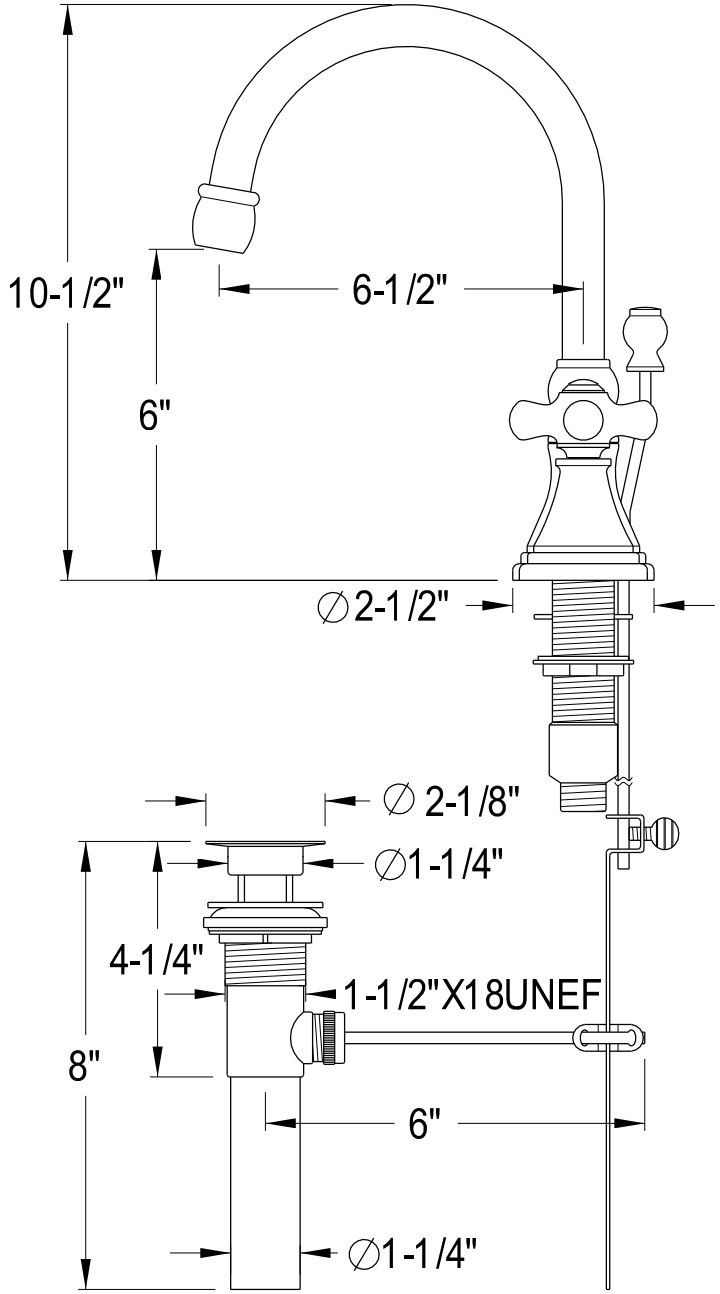
Widespread Lavatory Faucet With Brass Pop-Up