KX2522,8SBB
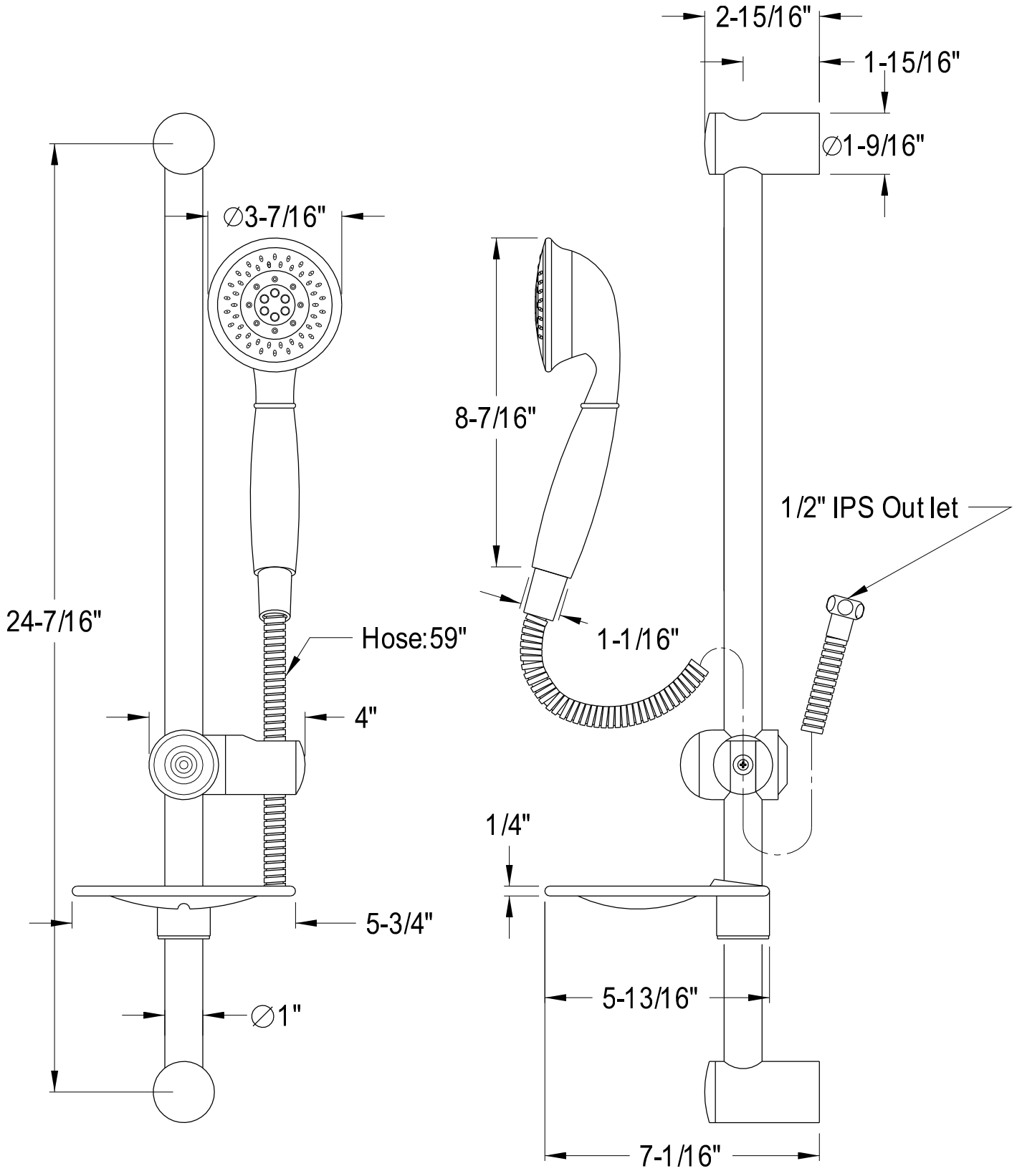
5 Setting Slide Bar Kit With Stainless Steel Hose